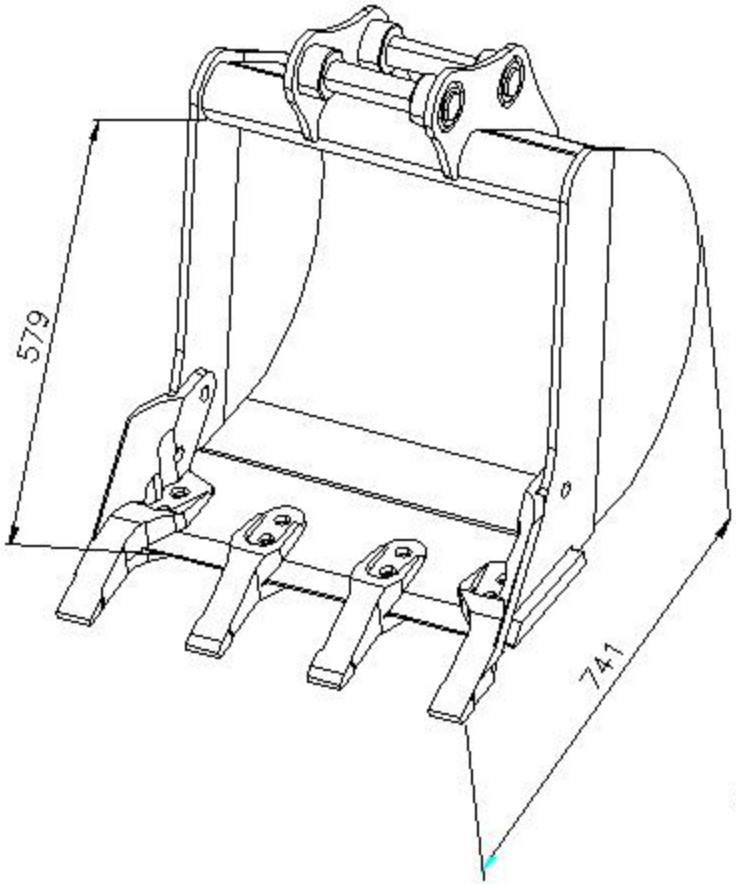

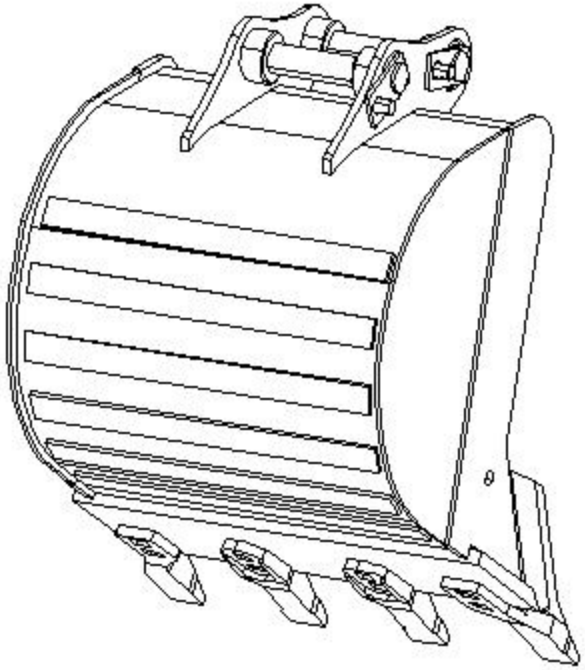

3–4 TON

STRICKLAND DIRECT

IF IN DOUBT – PLEASE ASK
DO NOT SCALE

A

A0